QUBOT

1 GENERAL INFORMATION

DESIGNERS

Jayce Cheng
Pablo Quijano Velasco
Leong Chang Jie
Eleen Koay

INSTITUTION

Institute of Materials Research and Engineering (IMRE),
Agency for Science, Technology and Research (A*STAR),
Singapore

2 DESCRIPTION

This is the assembly guide for the Qubot Gantry module

*Labware not included

3 SKILLS & RESOURCES

Access to FDM 3D printing	Required
Access to metal CNC milling	Optional
Access to acrylic laser cutting	Optional
Wire crimping	Required

4 TOOLS

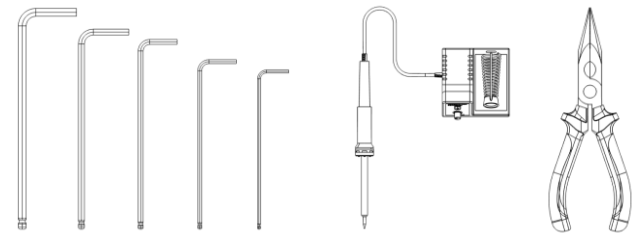

4 mm 3 mm 2 mm 1.5 mm 1 mm 235 °C

5 MODEL

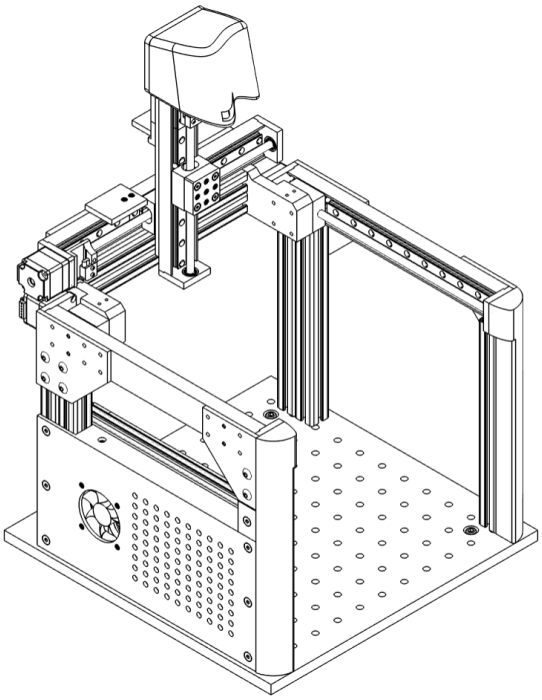

Linear motion assembly

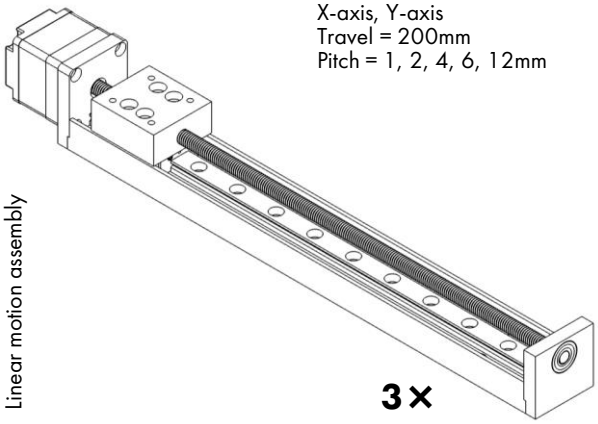

X-axis, Y-axis
Travel = 200mm
Pitch = 1, 2, 4, 6, 12mm

3×

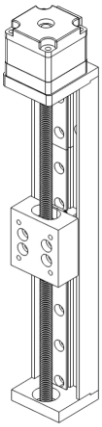

Z-axis
Travel = 50, 100, 150, 200mm
Pitch = 1, 2, 4mm

1×

50mm 12V DC fan

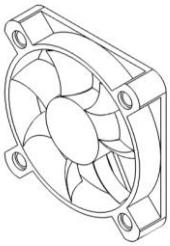

1×

Endstop switch

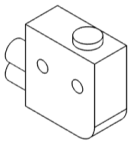

3×

2020 Bracket

2×

Rubber foot M6

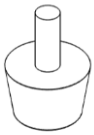

3×

Panel mount USB

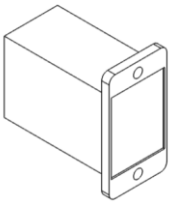

1×

Hex countersunk

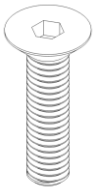

M3×06 **2×**
M3×10 **4×**
M3×14 **4×**

M4×08 **12×**
M4×10 **2×**
M4×14 **4×**

M5×10 **4×**
M6×10 **4×**

Hex button

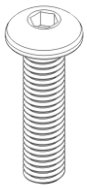

M2×08 **6×**
M2.5×06 **2×**
M2.5×14 **4×**

M3×08 **5×**
M3×12 **4×**

M5×08 **22×**
M6×10 **2×**

Drop-in T-nut 2020

M3 **1×**
M4 **16×**
M5 **22×**

Socket

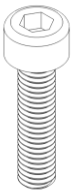

M3×06 **12×**
M3×12 **4×**
M3×25 **8×**
M5×20 **6×**

Knurled heat insert

M2×L3×OD3.2 **6×**
M2.5×L3×OD3.5 **2×**
M3×L3×OD4.5 **21×**

Dome nut

M3 **1×**

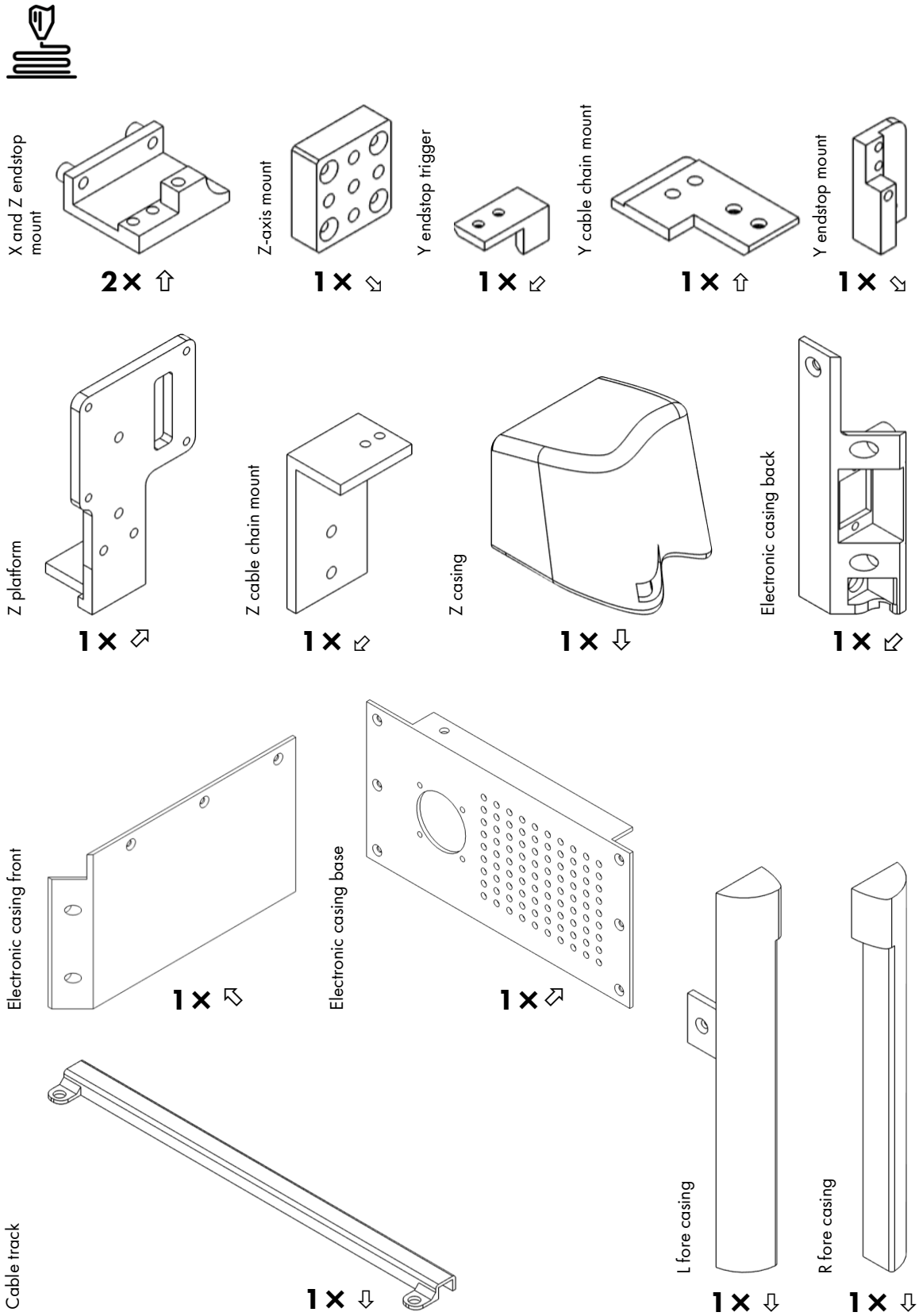

'⇧' Recommended print direction

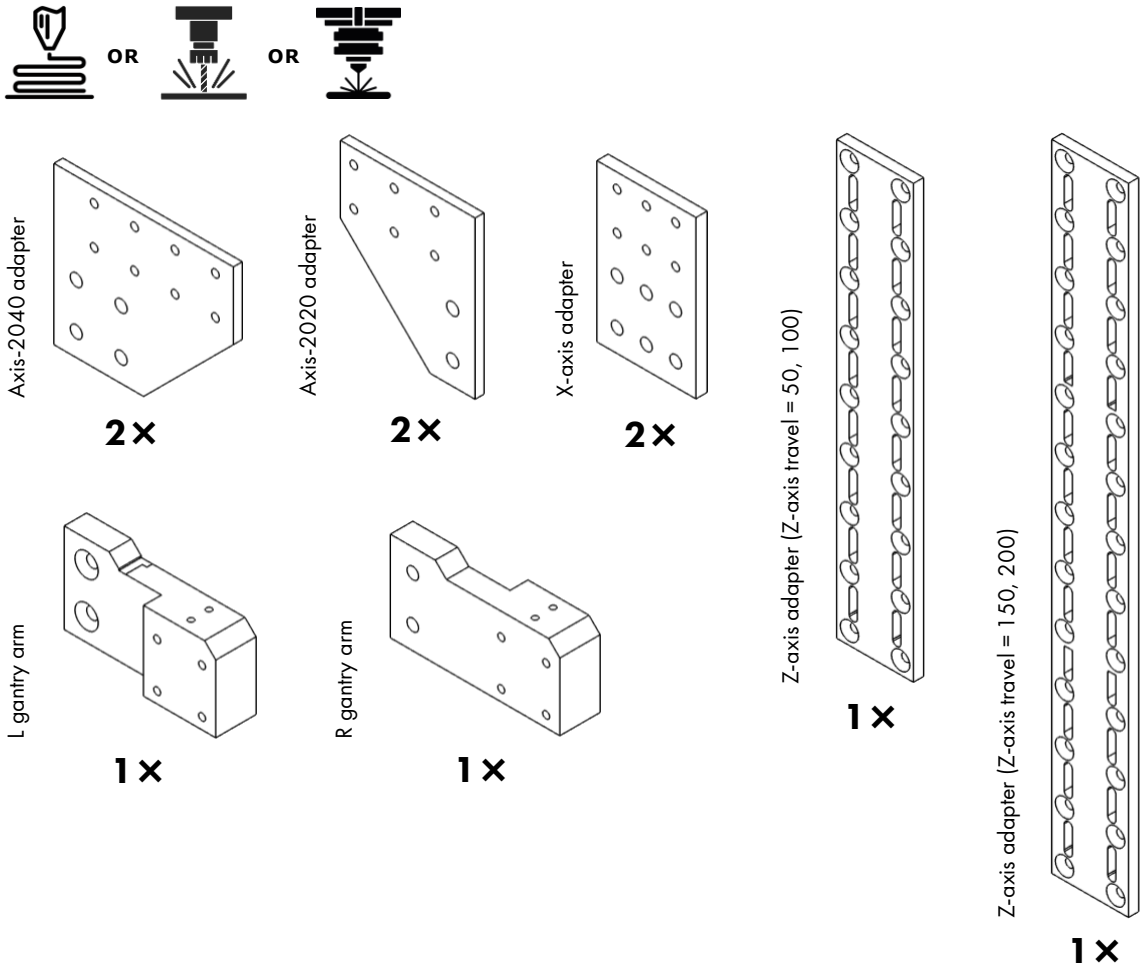

1 HEAT INSERT

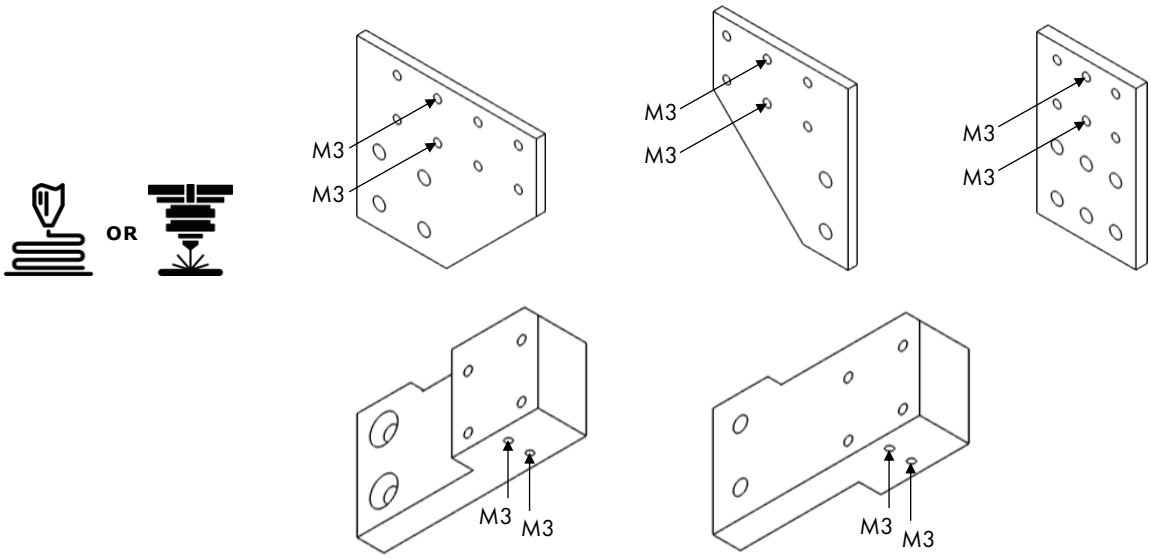

1 HEAT INSERT

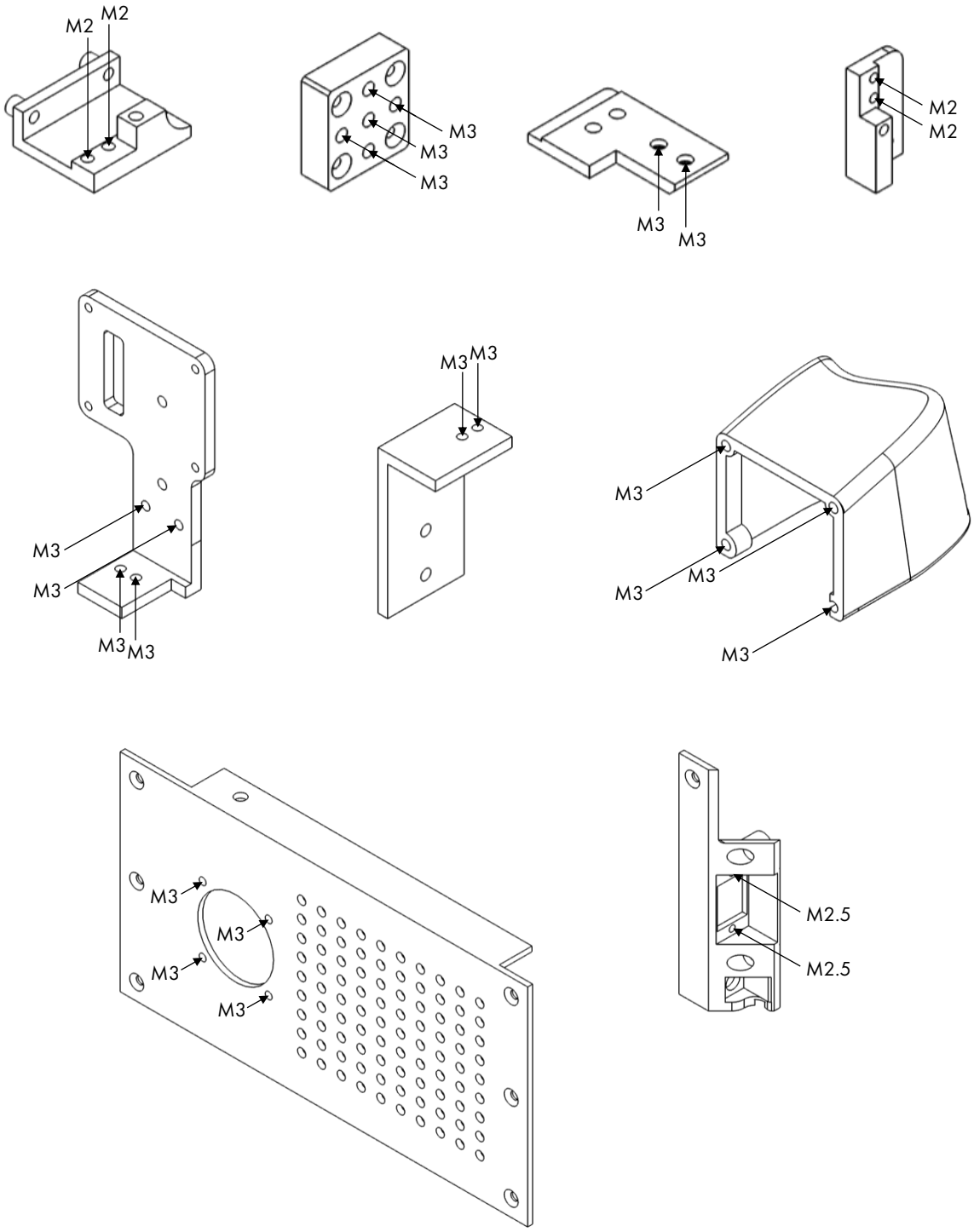

2 ASSEMBLY

1

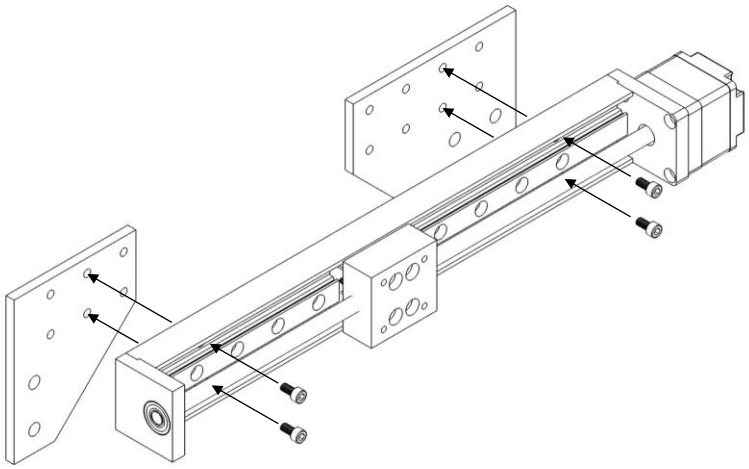

2

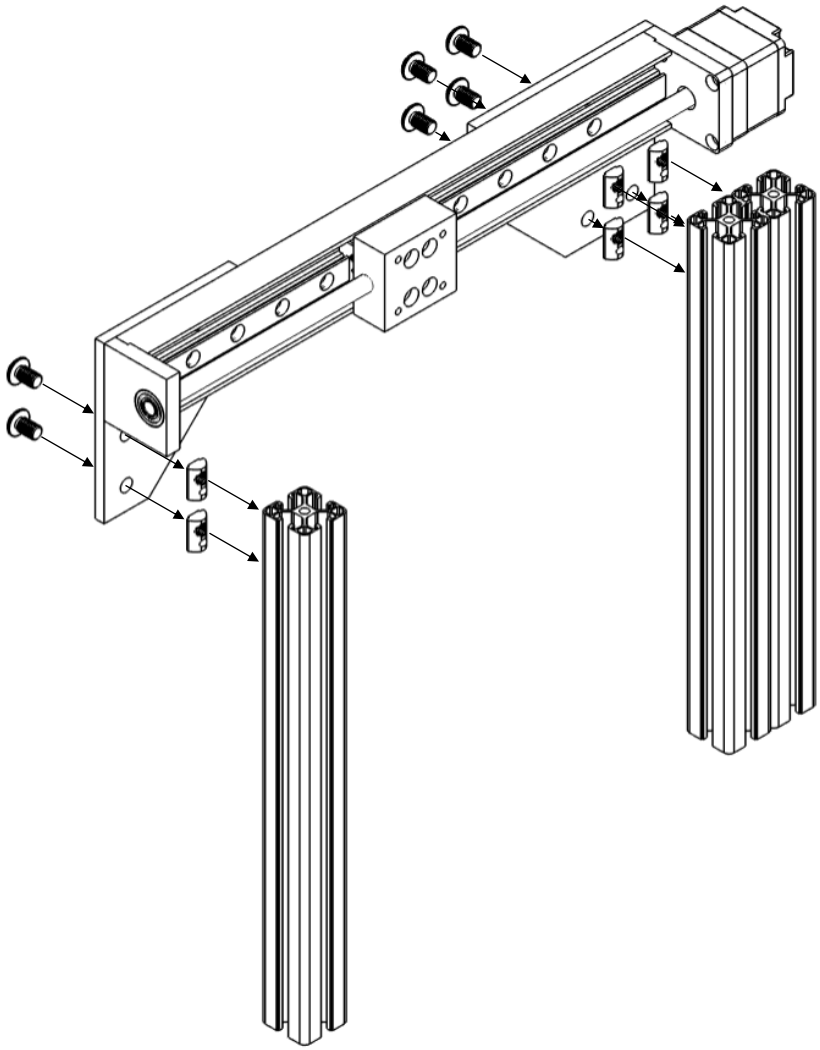

3

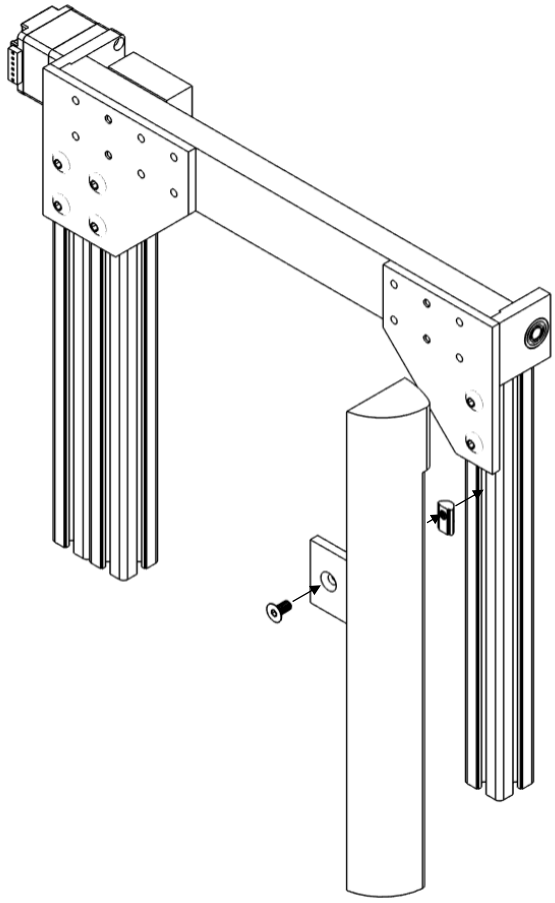

4

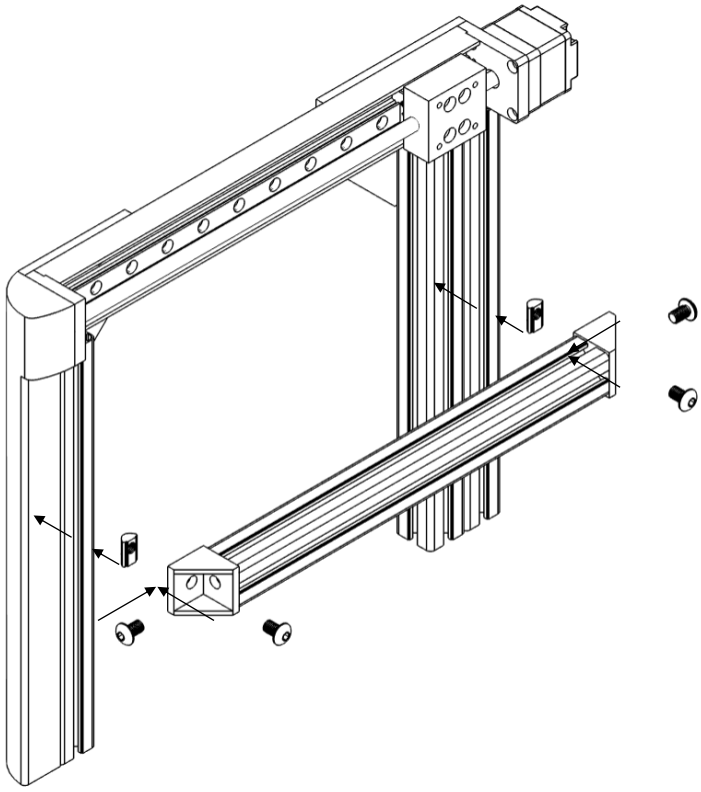

5

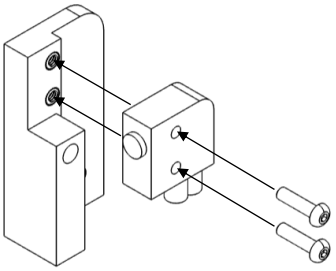

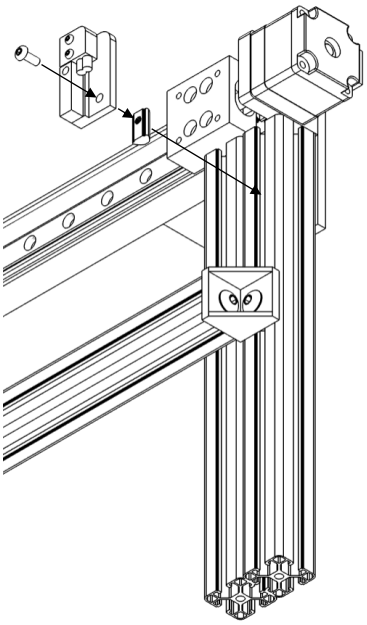

Left gantry (y1-axis)

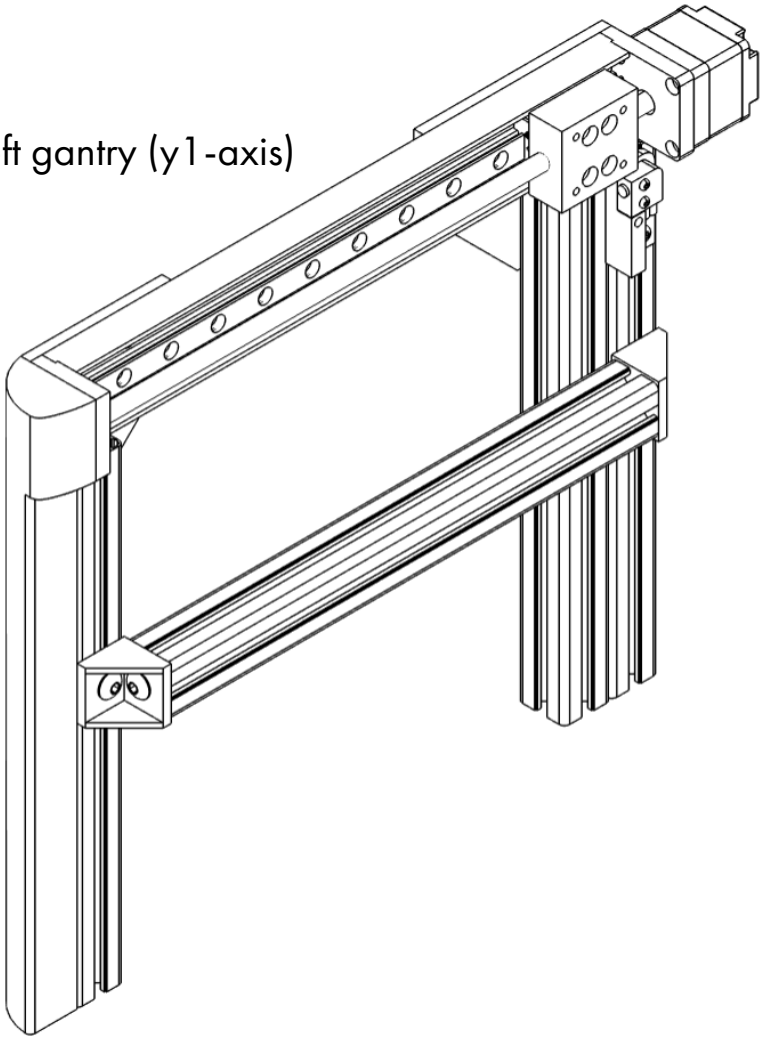

6

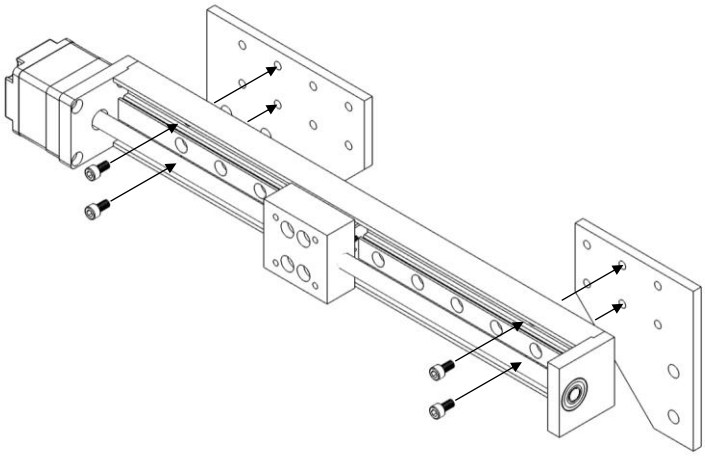

7

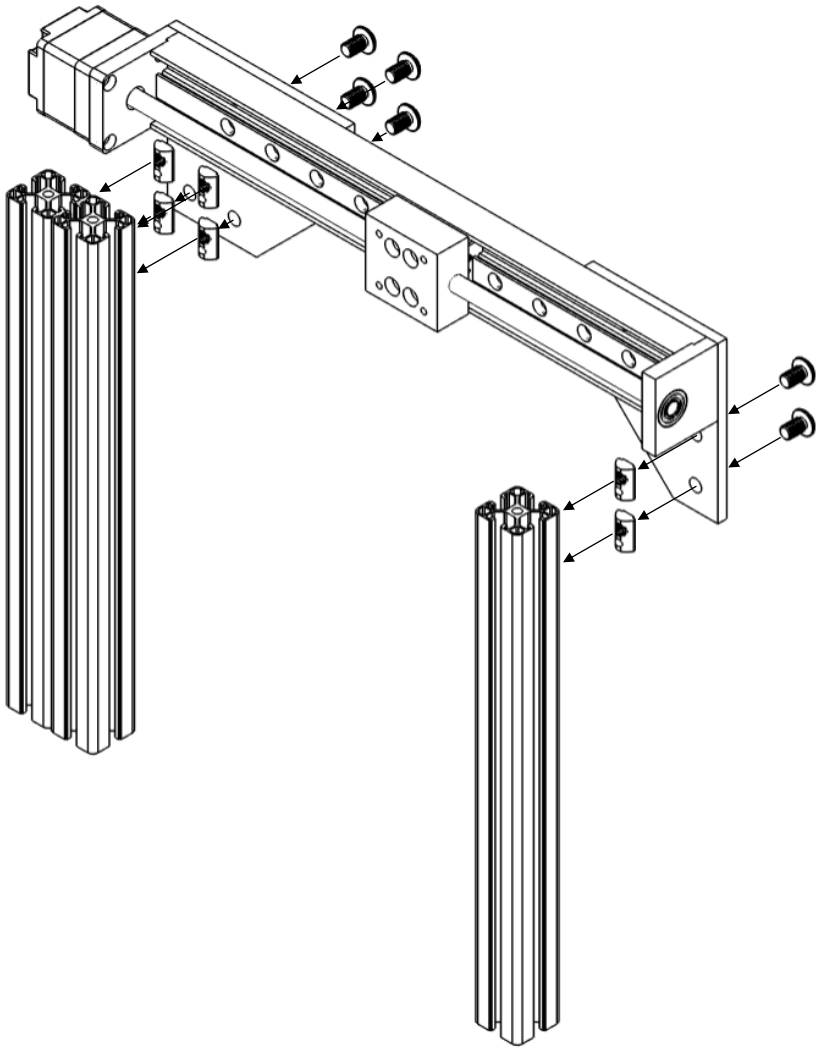

8

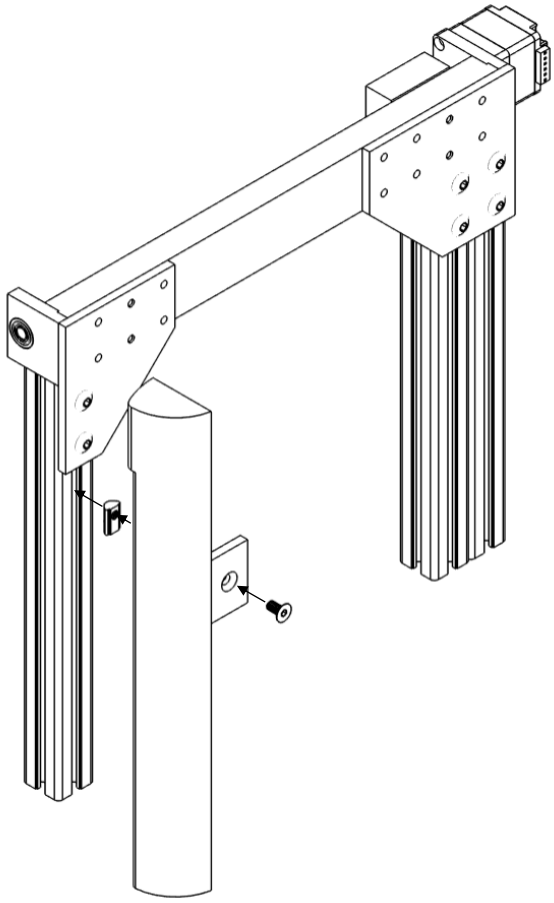

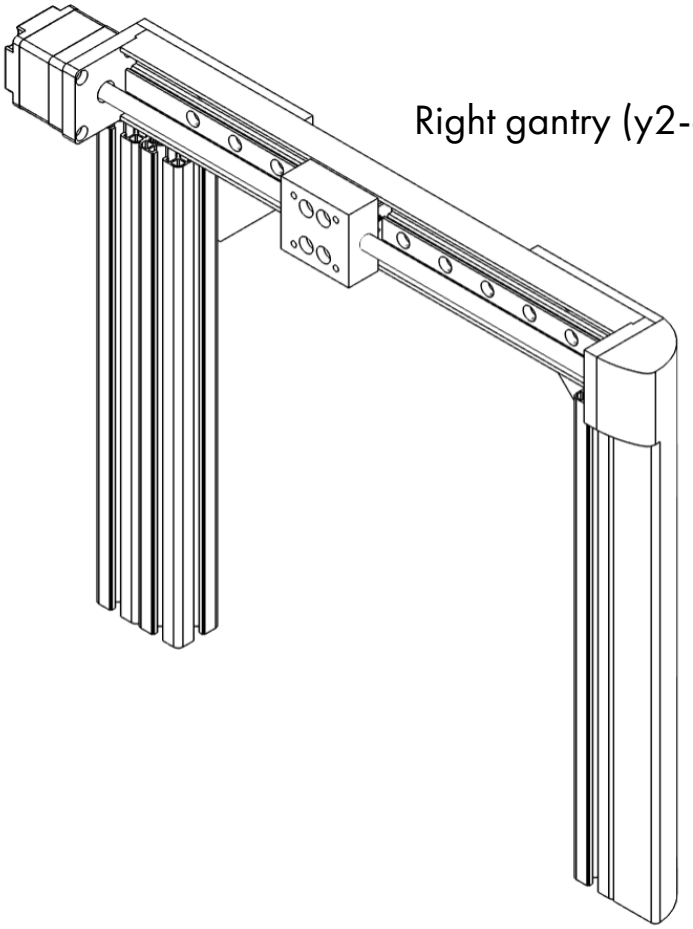

Right gantry (y2-axis)

9

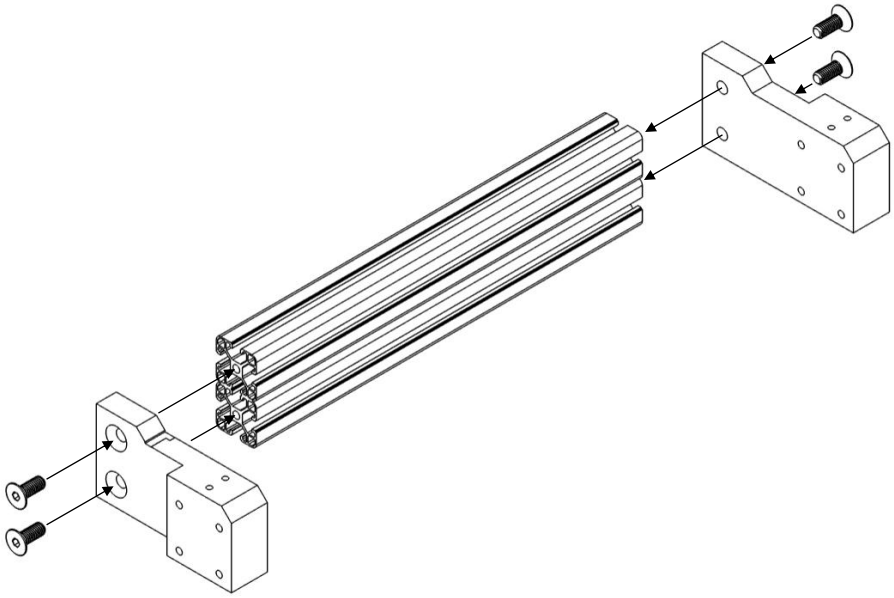

10

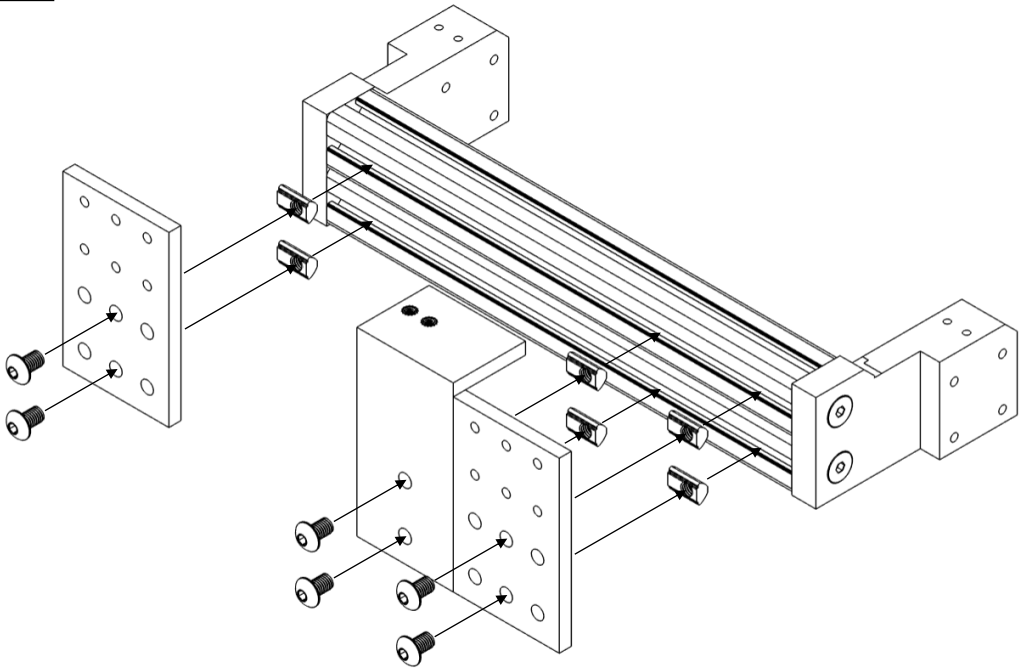

11

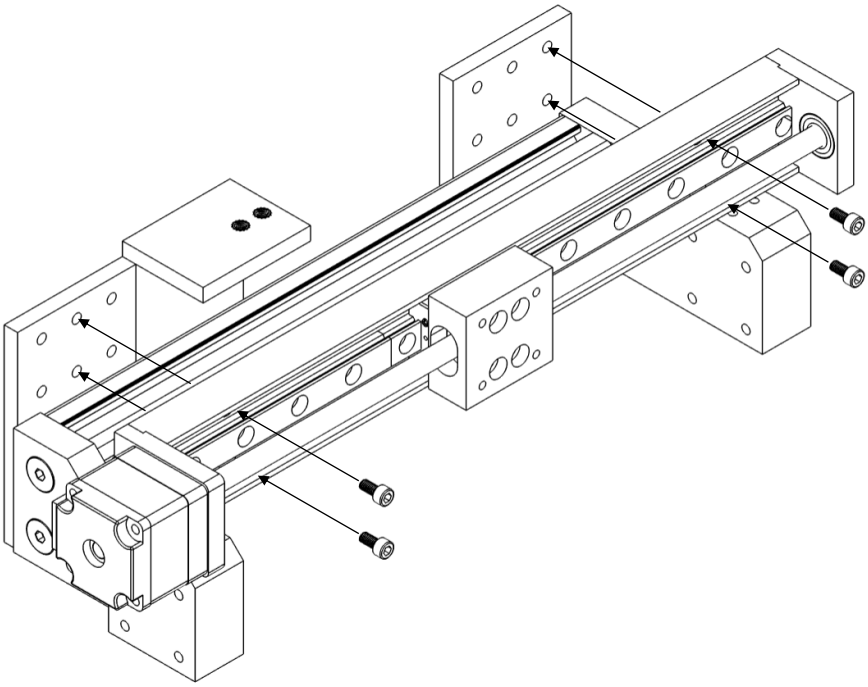

12

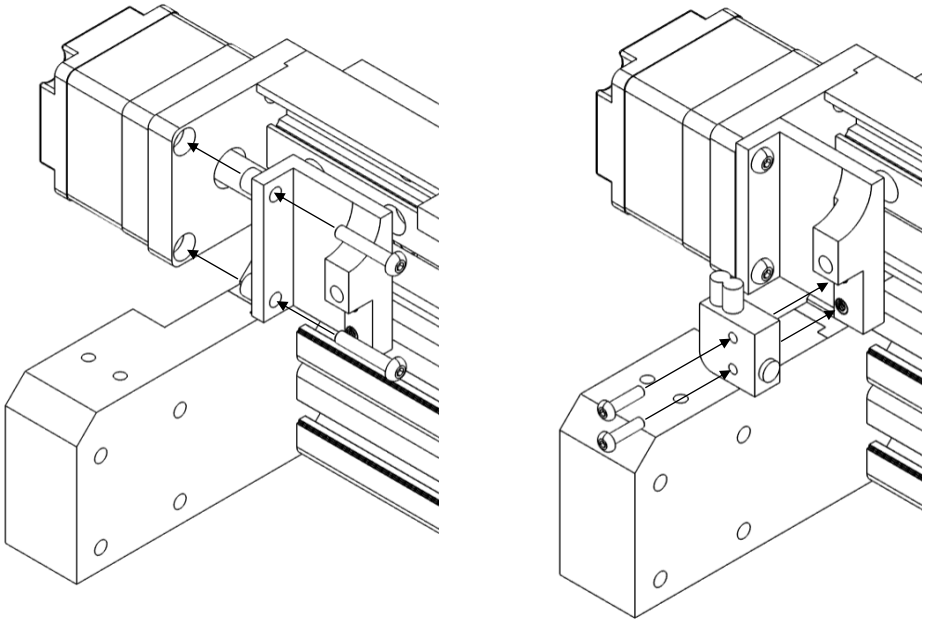

13

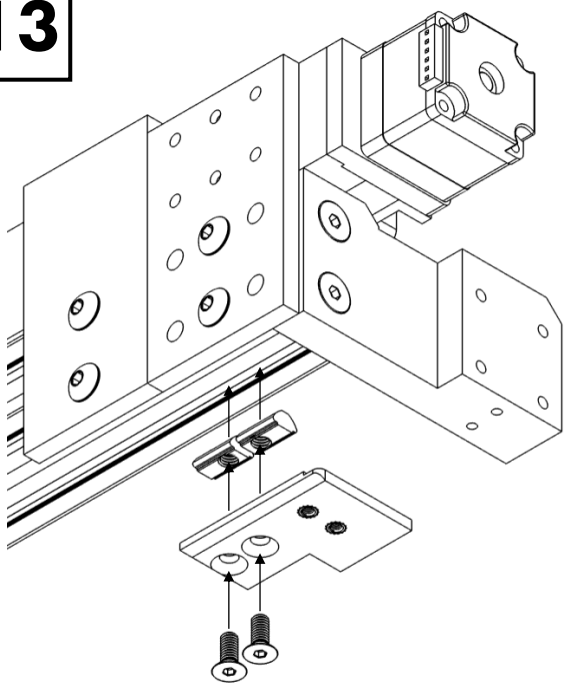

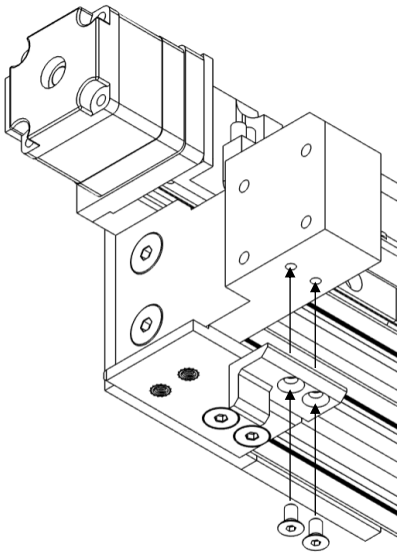

Crossbar (x-axis)

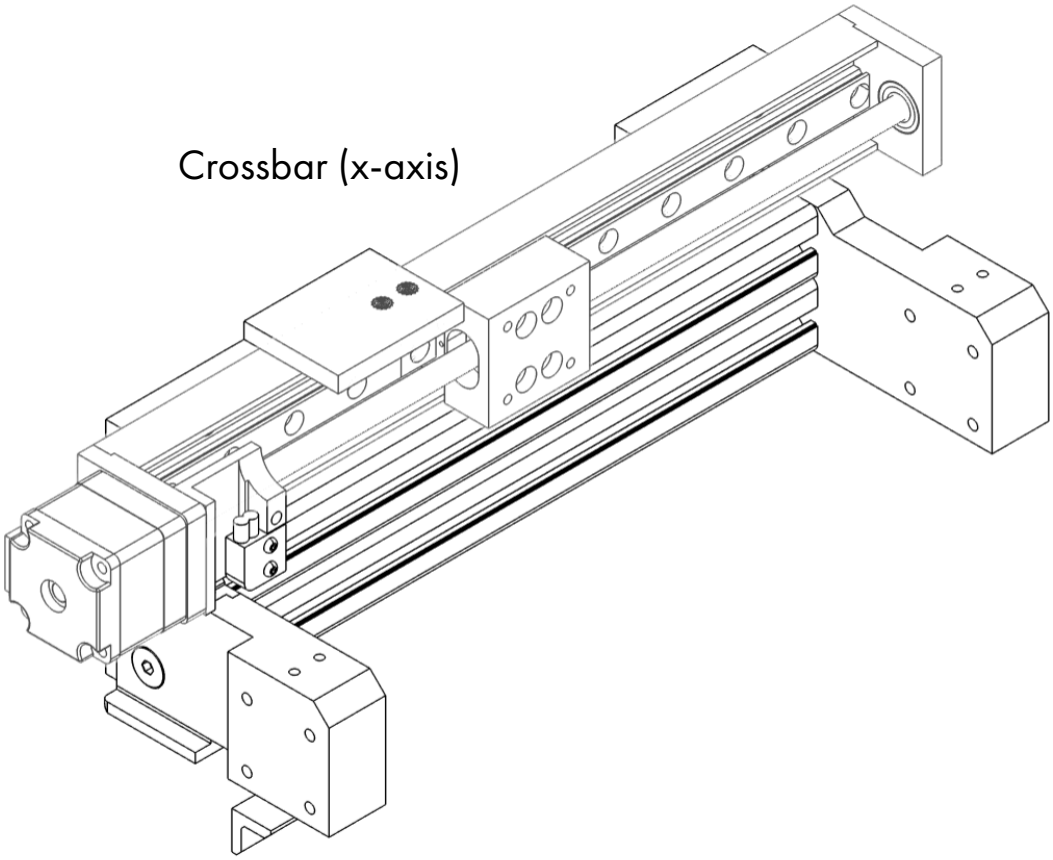

14

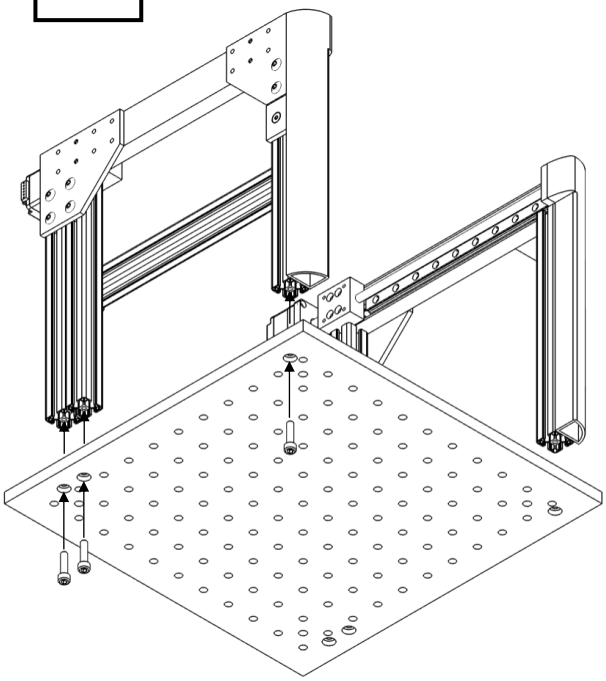

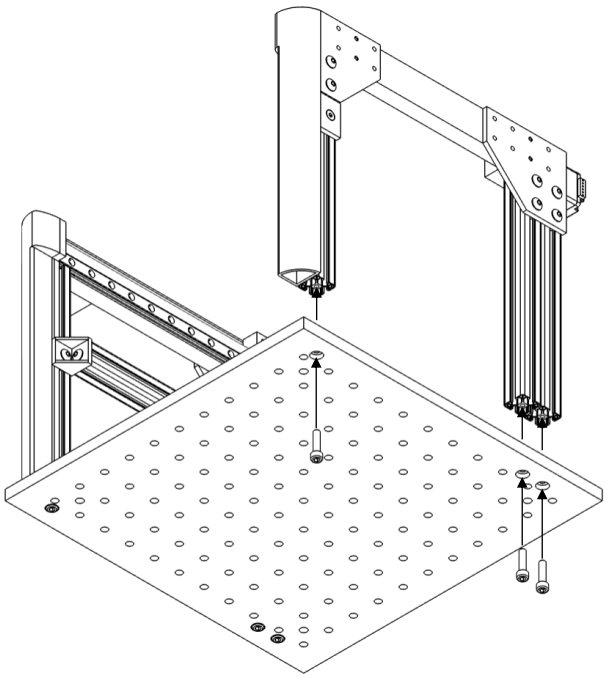

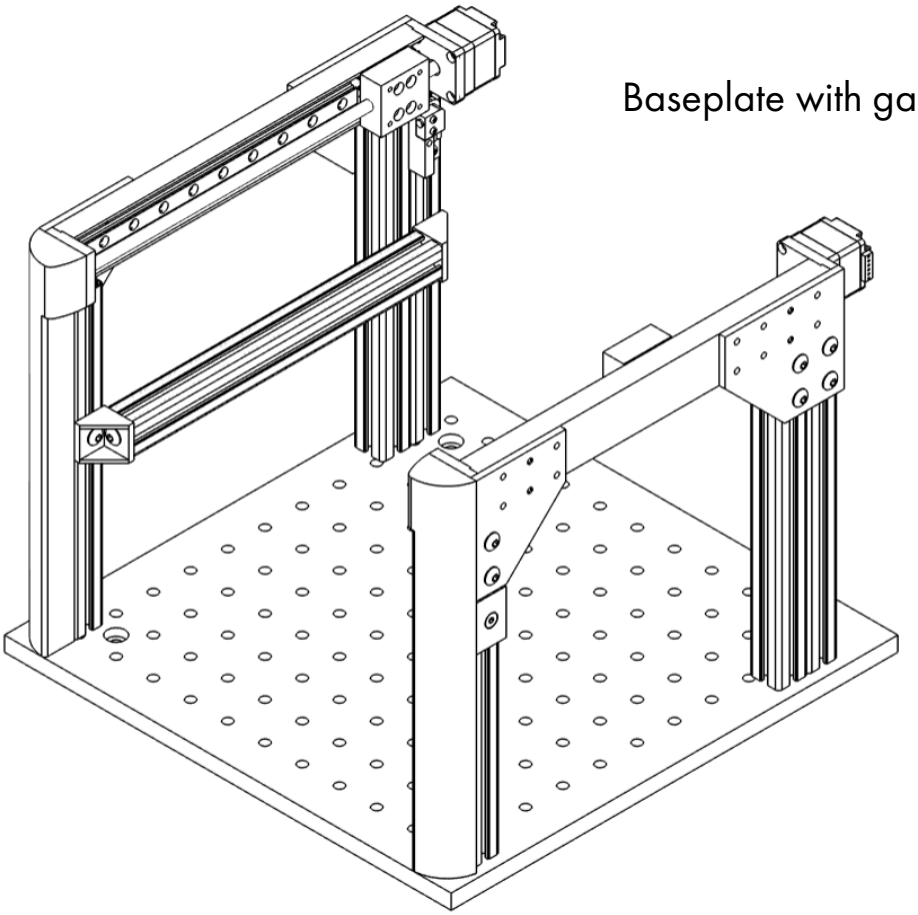

Baseplate with gantries

15

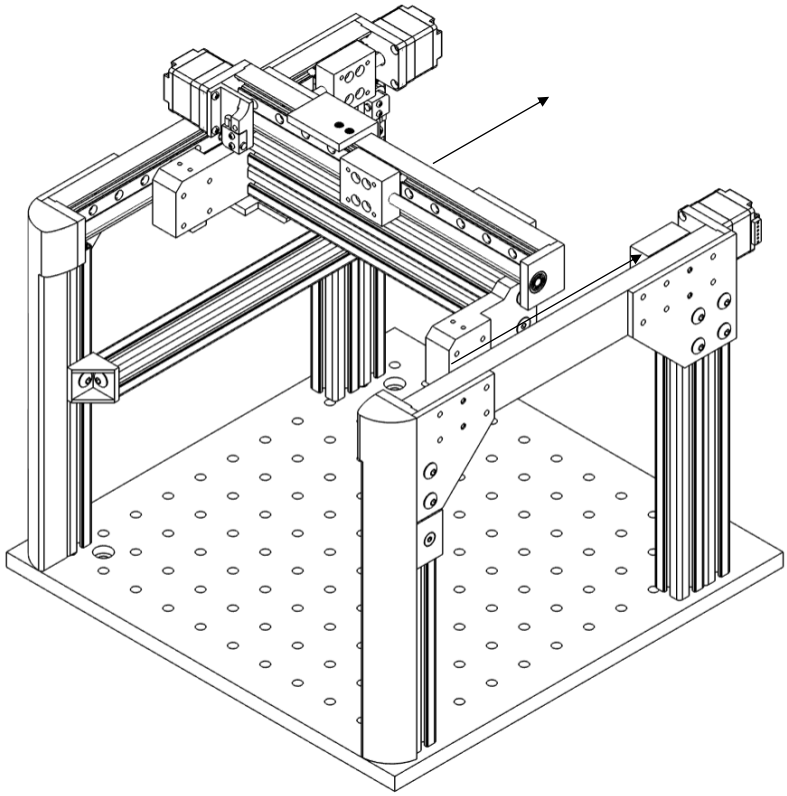

16

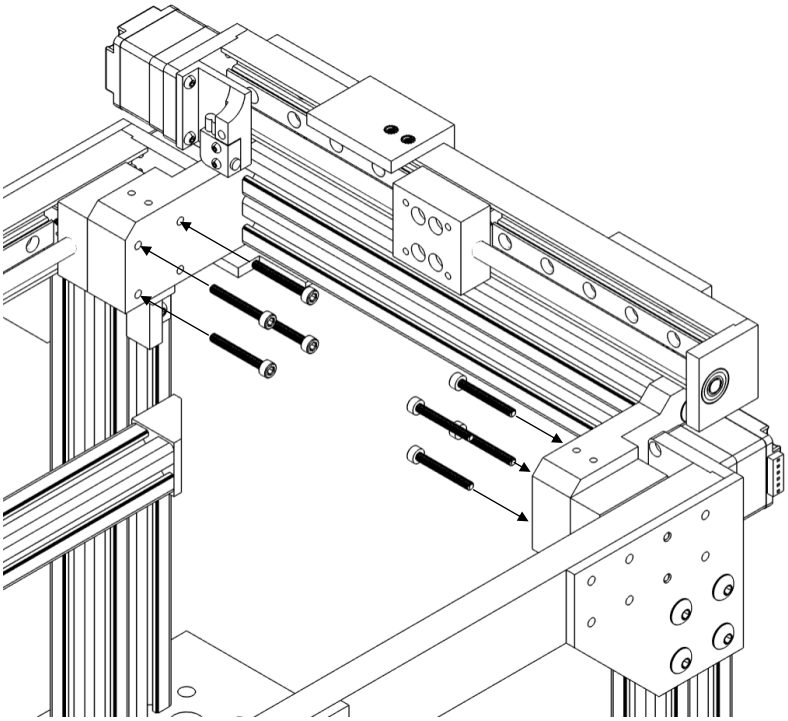

17

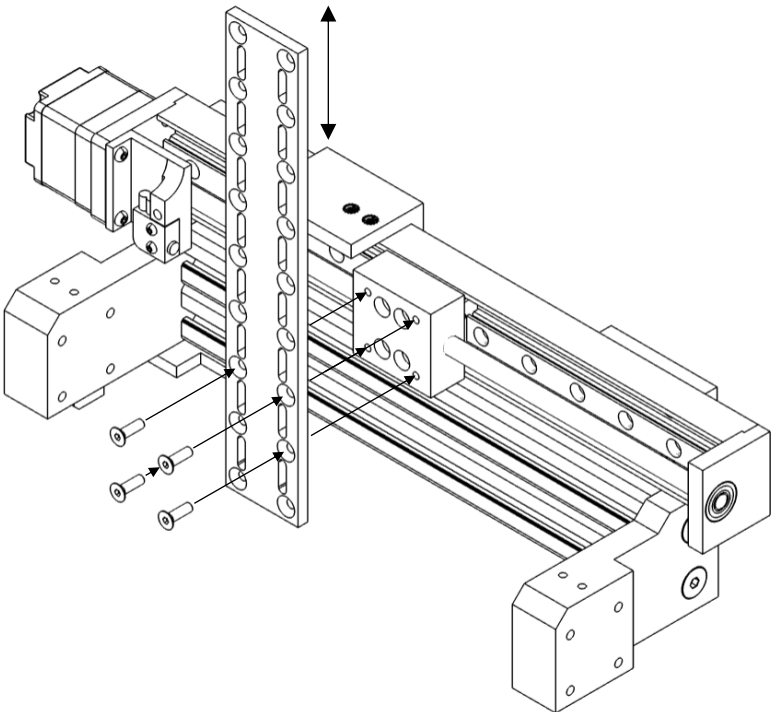

18

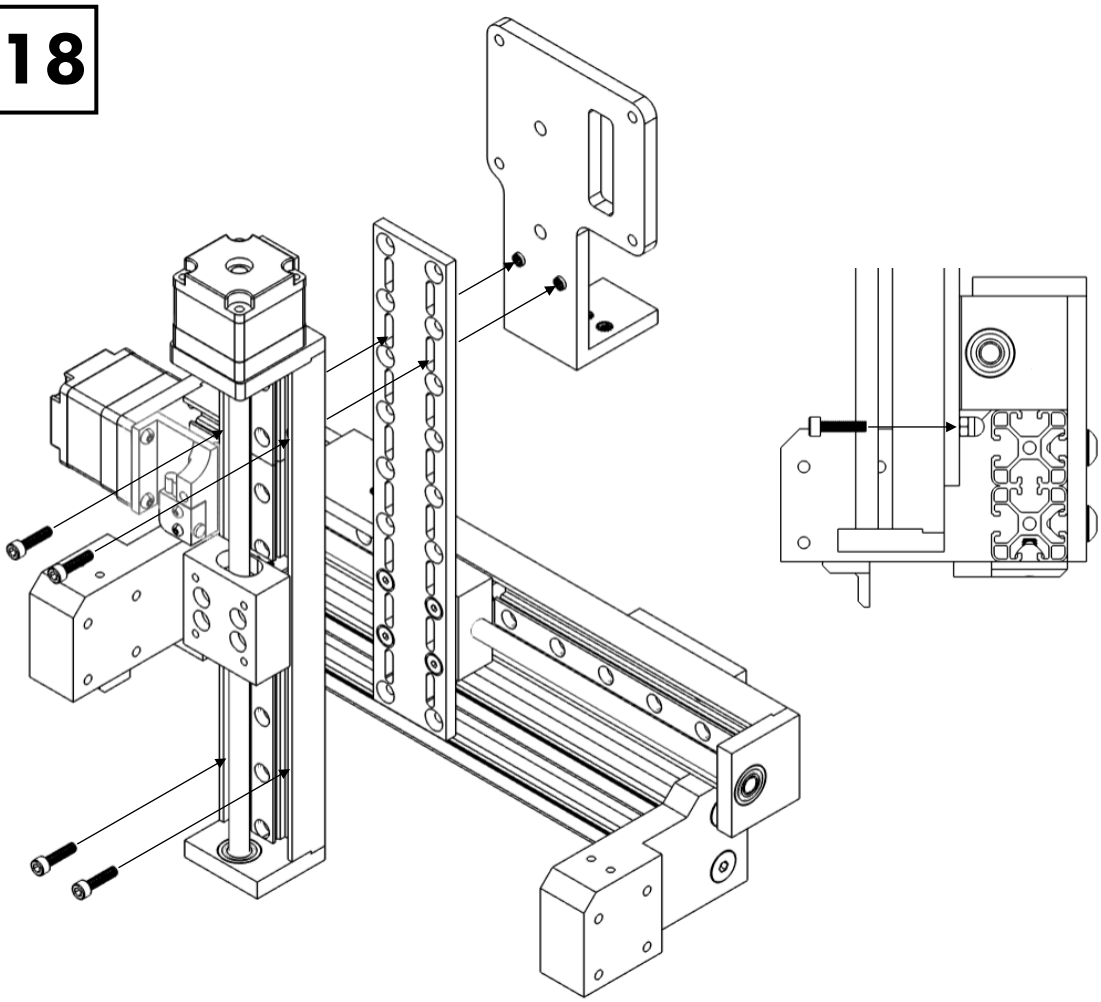

19

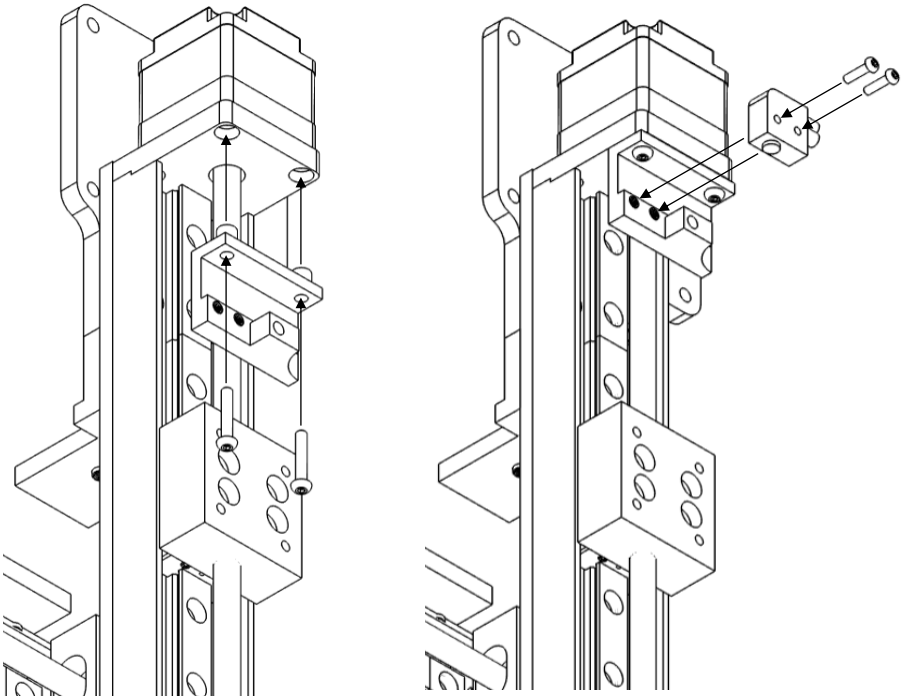

20

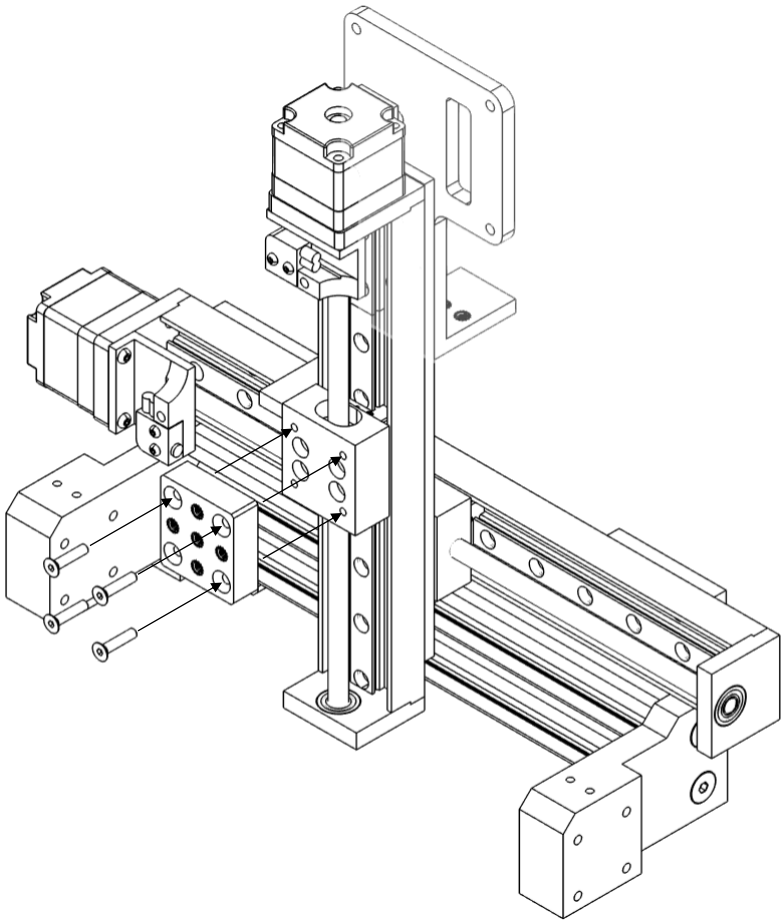

21

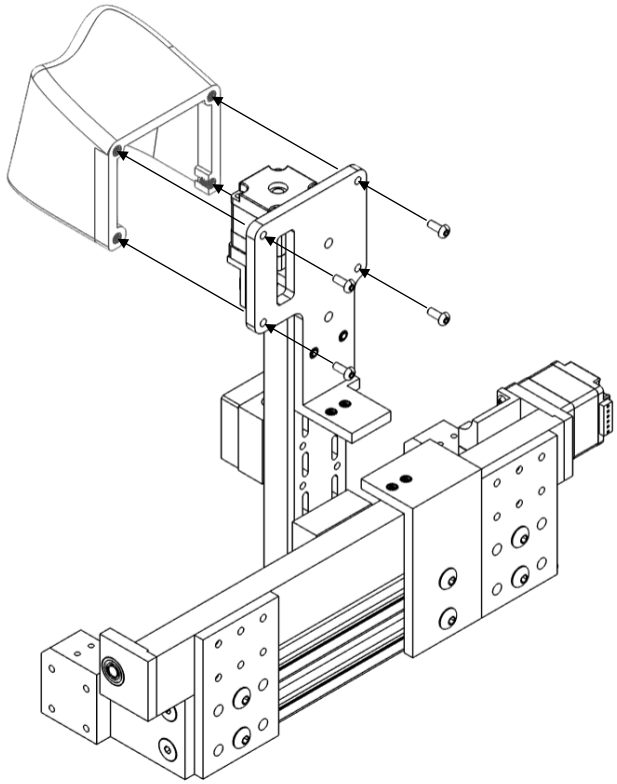

All axes assembled

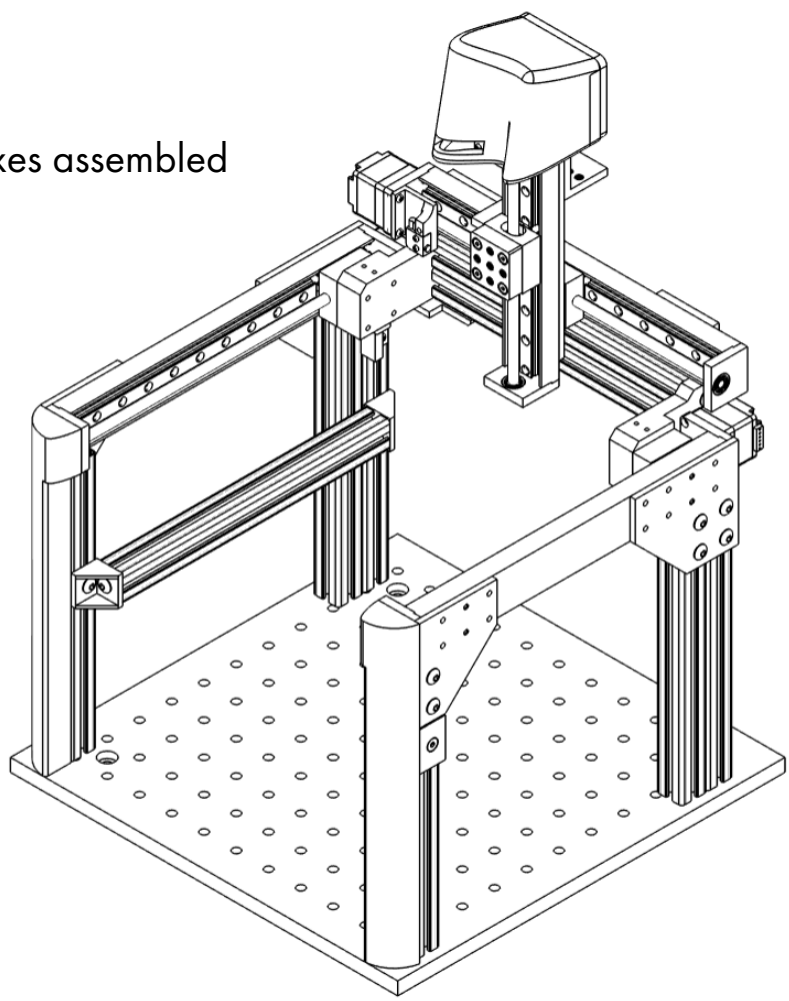

22

a

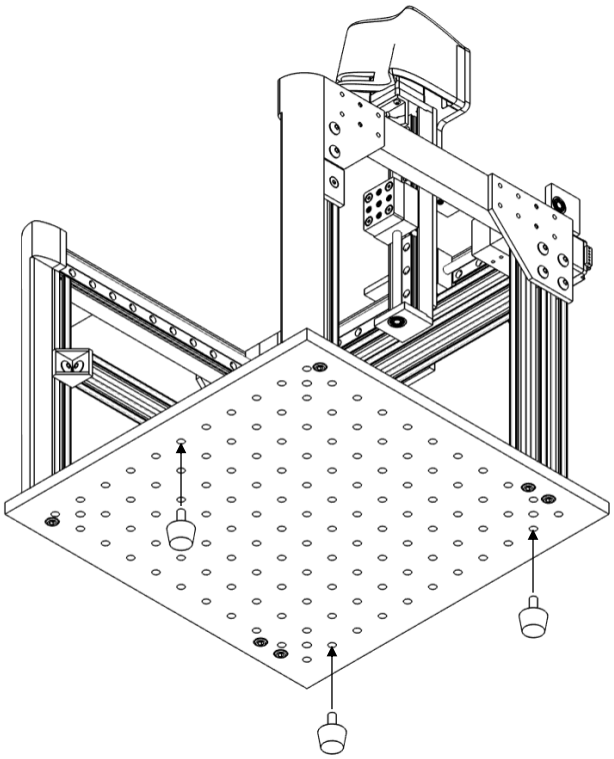

b

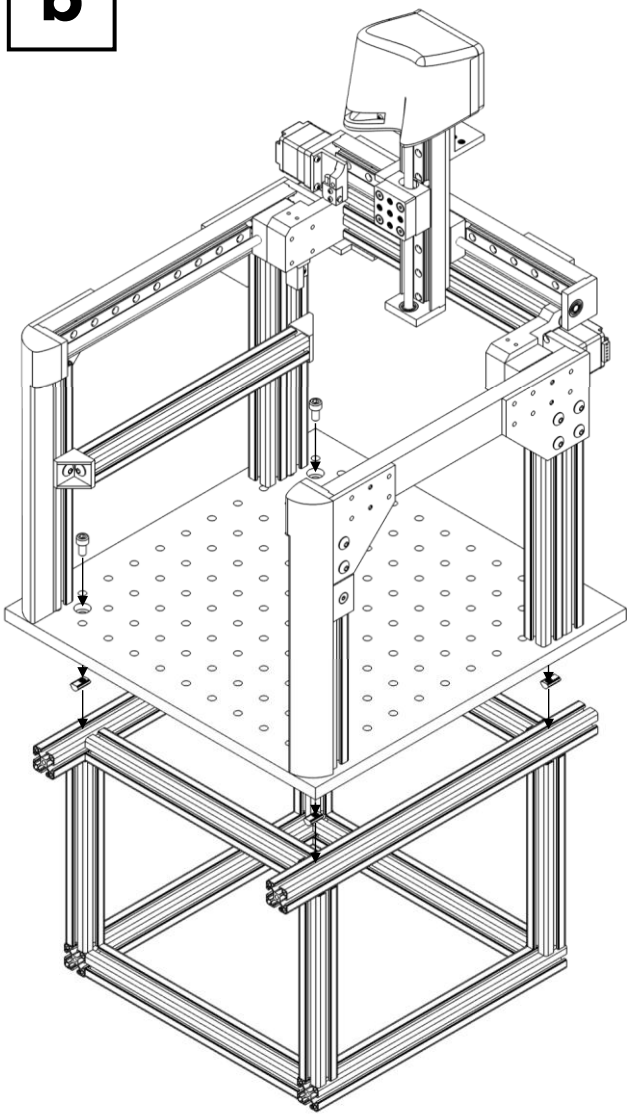

23

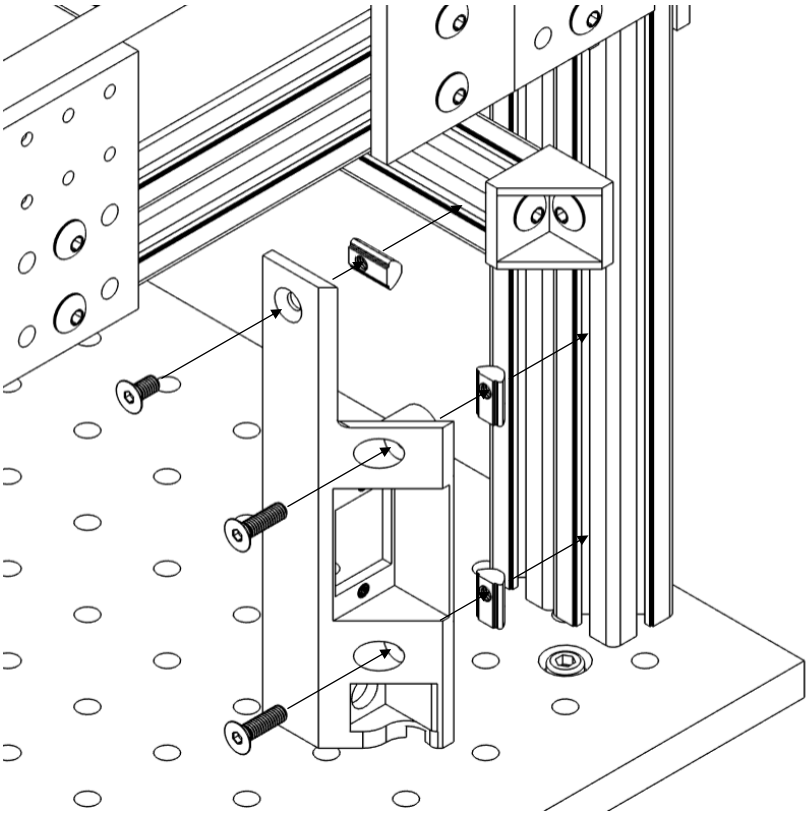

24

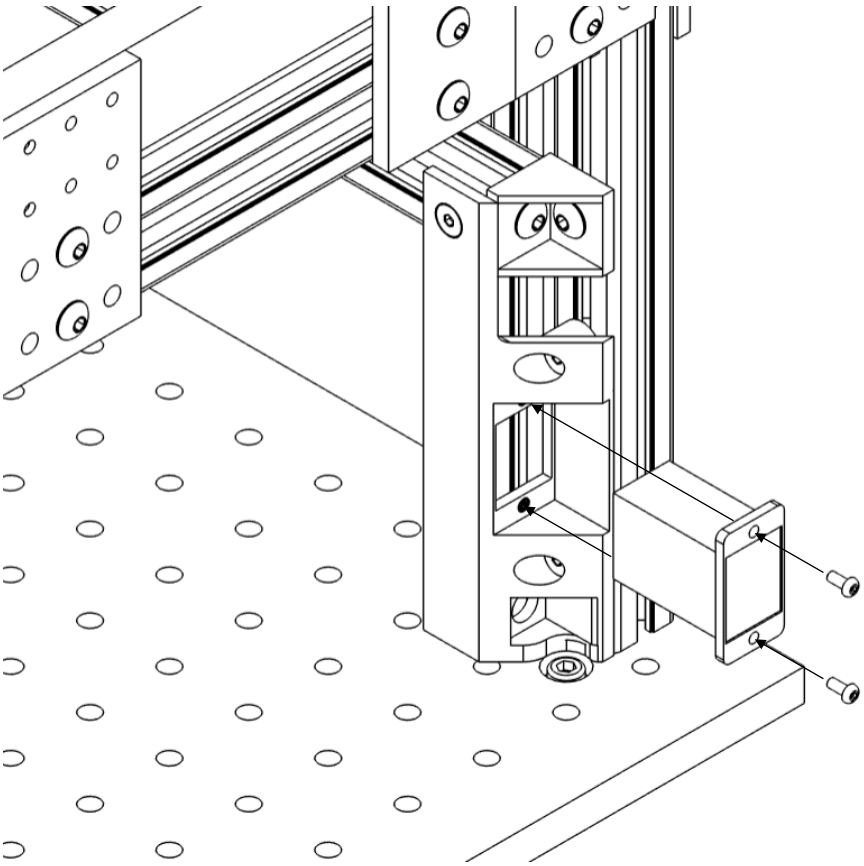

25

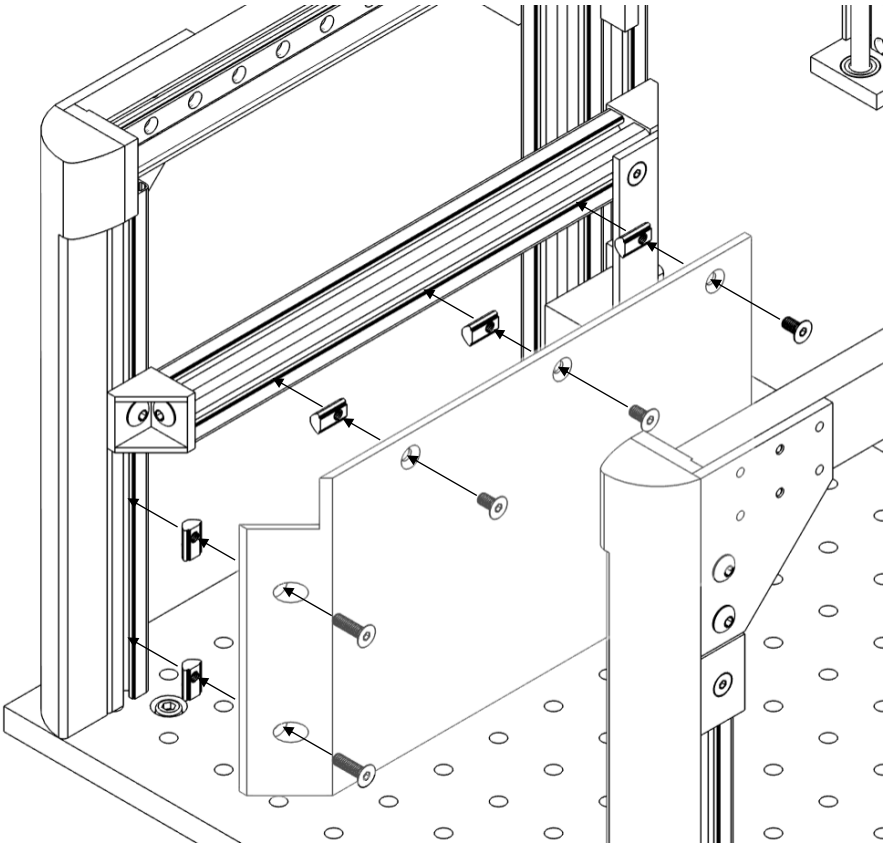

26

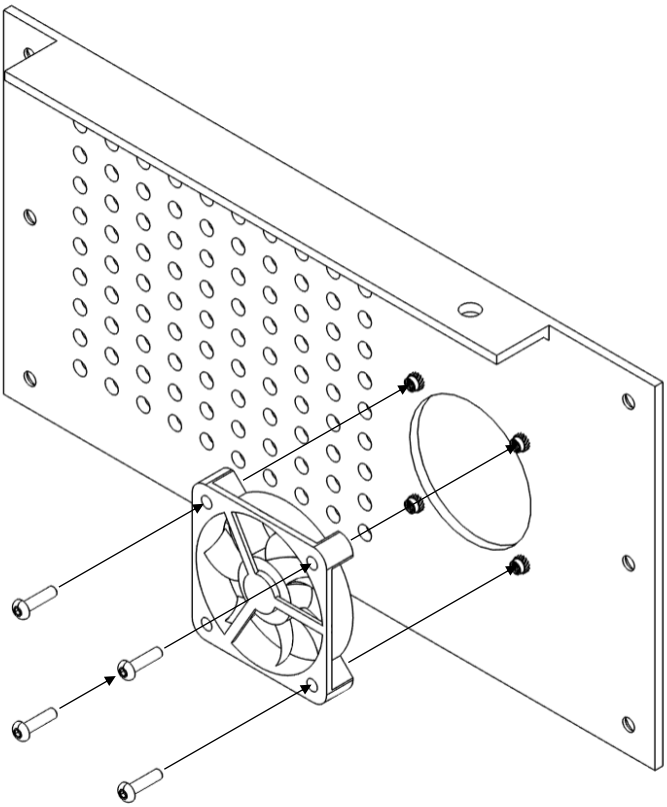
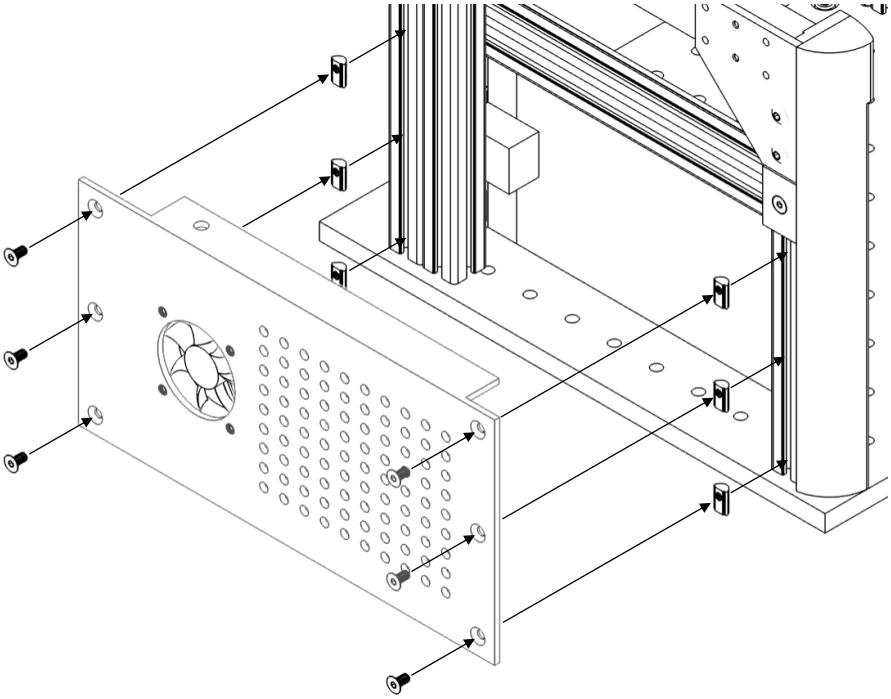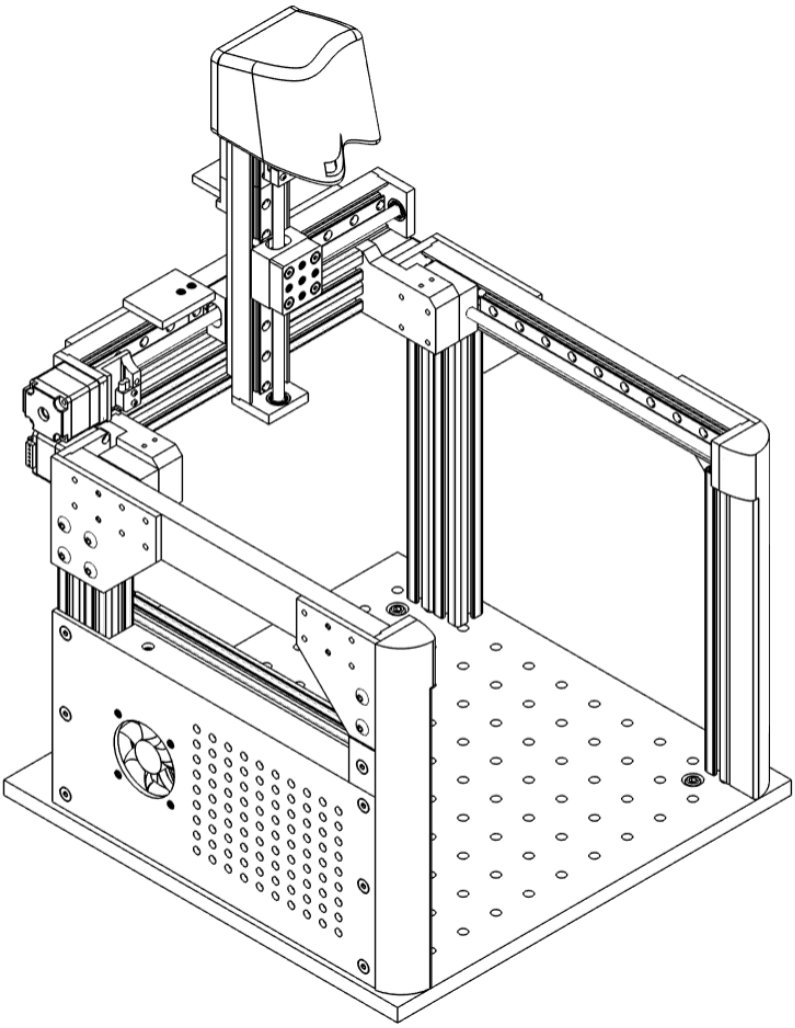
27